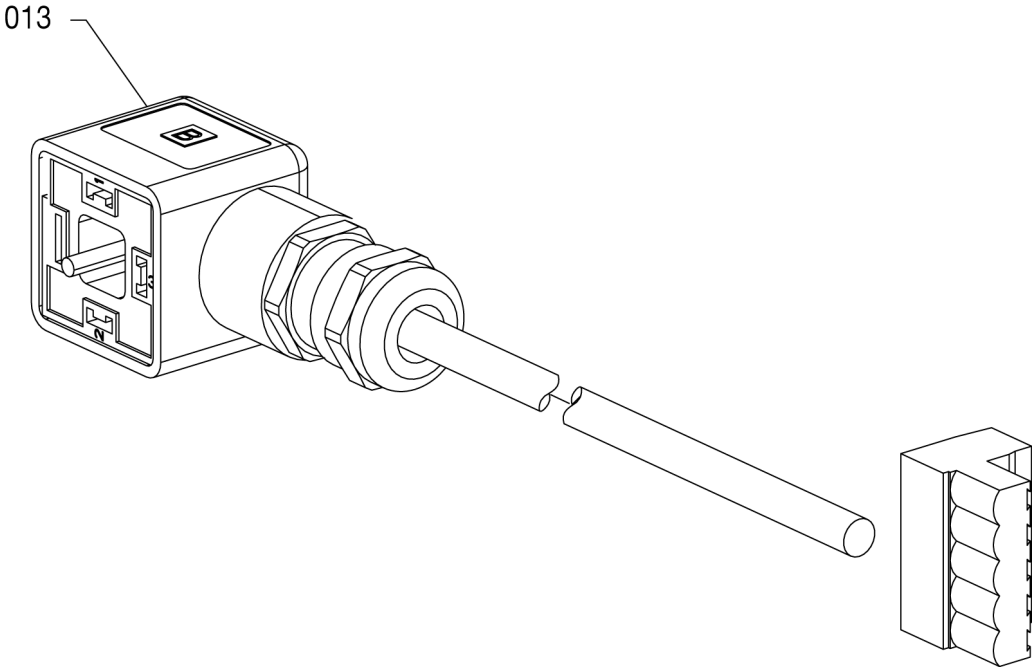
013

Tools for special running

Item no	Qty	Designation
013	-	Cable, complete

Plate
6670-0100-0001.0