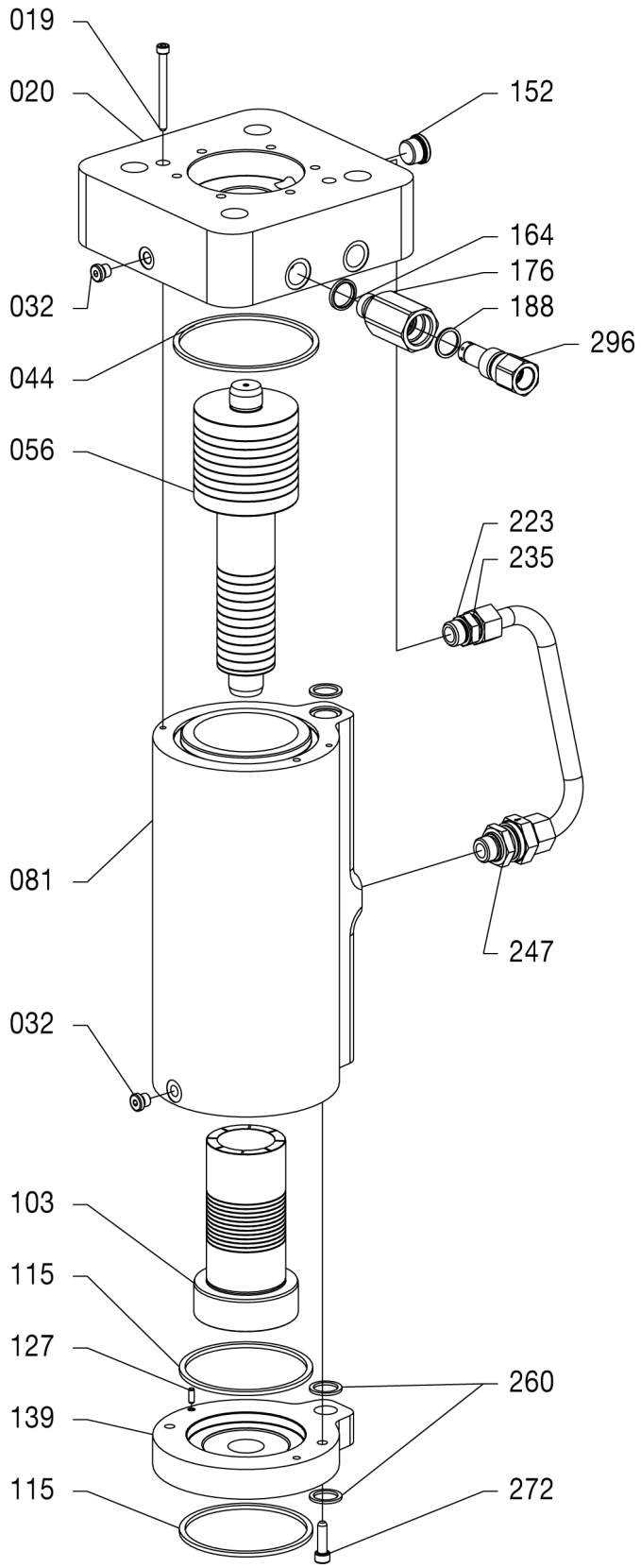

Exhaust Valve Actuator

Plate 4572-0100-0010

2012-07-11 - en

Exhaust Valve Actuator

Item no	Qty	Designation
019	-	Screw
020	-	Oil cylinder, top piece
032	-	Plug screw
044	-	Sealing ring
056	-	Piston
081	-	Oil cylinder
103	-	Piston
115	-	Sealing ring
127	-	Guide pin
139	-	Oil cylinder,bottom piece
152	-	Plug screw
164	-	Gasket
176	-	Valve housing
188	-	Sealing ring
223	-	Straight stud coupling
235	-	Steel pipe
247	-	Non-return valve
260	-	Sealing ring
272	-	Screw
296	-	Non-return valve

Plate 4572-0100-0010

2012-07-11 - en